EV4-D

Power Repeater

4 Channel Constant Voltage Power Repeater

- 12-24V constant voltage power repeater.
- 4 channel, 5A per channel.
- To receive PWM signal control.
- Power repeater in series or in parallel to expand output unlimitedly.
- Apply to single color, dual color, RGB or RGBW constant voltage LED strip or module.
- Available in white or black.

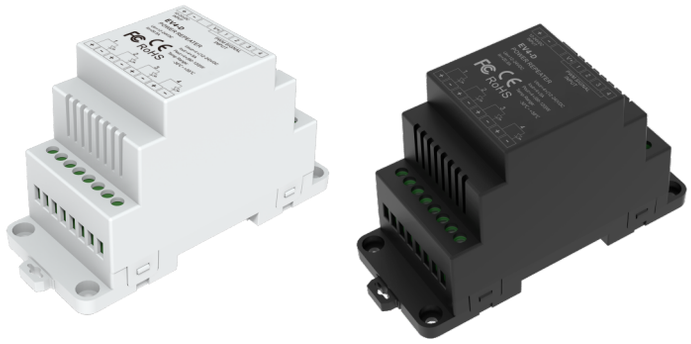

FC CE RoHS

Technical Parameters

Input and Output	
Input voltage	12-24VDC
Input current	20.5A
Input signal	PWM
Output voltage	4 x (12-24)VDC
Output current	4CH, 5A/CH
Output power	4 x (60-120)W
Output type	Constant voltage

Warranty and Protection	
Warranty	5 years
Protection	Reverse polarity
Environment	
Operation temperature	Ta: -30°C ~ +55°C
Case temperature (Max.)	Tc: +85°C
IP rating	IP20

Safety and EMC	
EMC standard	EN IEC 55015/EN IEC 61547
Safety standard	EN 61347-1/-2 EN 62493
Certification	CE RoHS FCC
Package	
Size	L120 x W78 x H55mm
Gross weight	0.170kg

Mechanical Structures and Installations

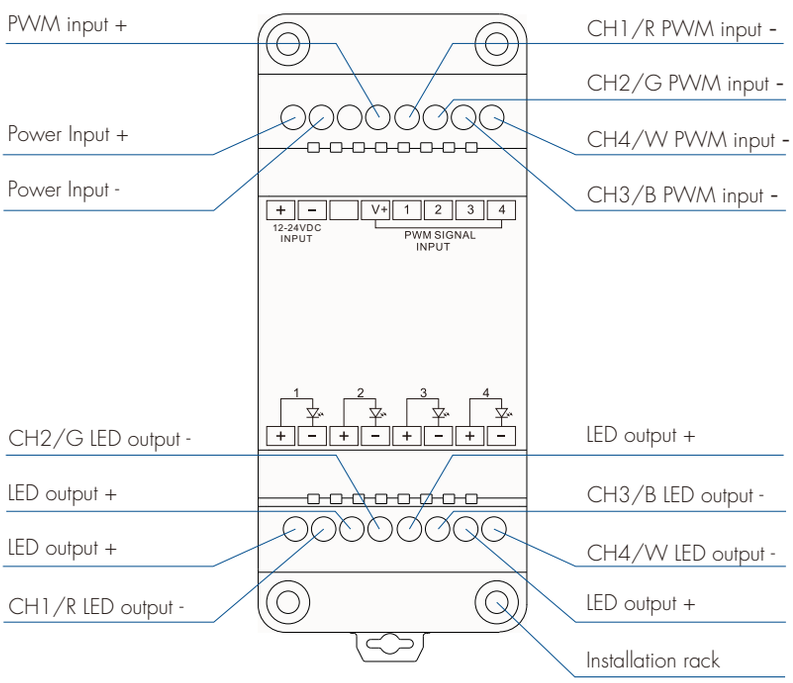

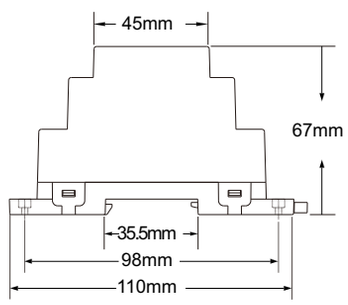

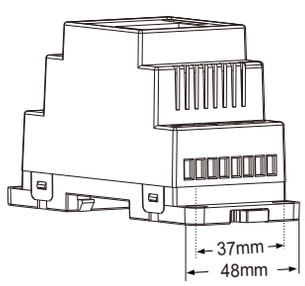

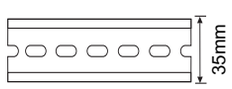

DIN Rail Mounting Size:
TS-35/7.5 or TS-35/15

Wiring Diagram

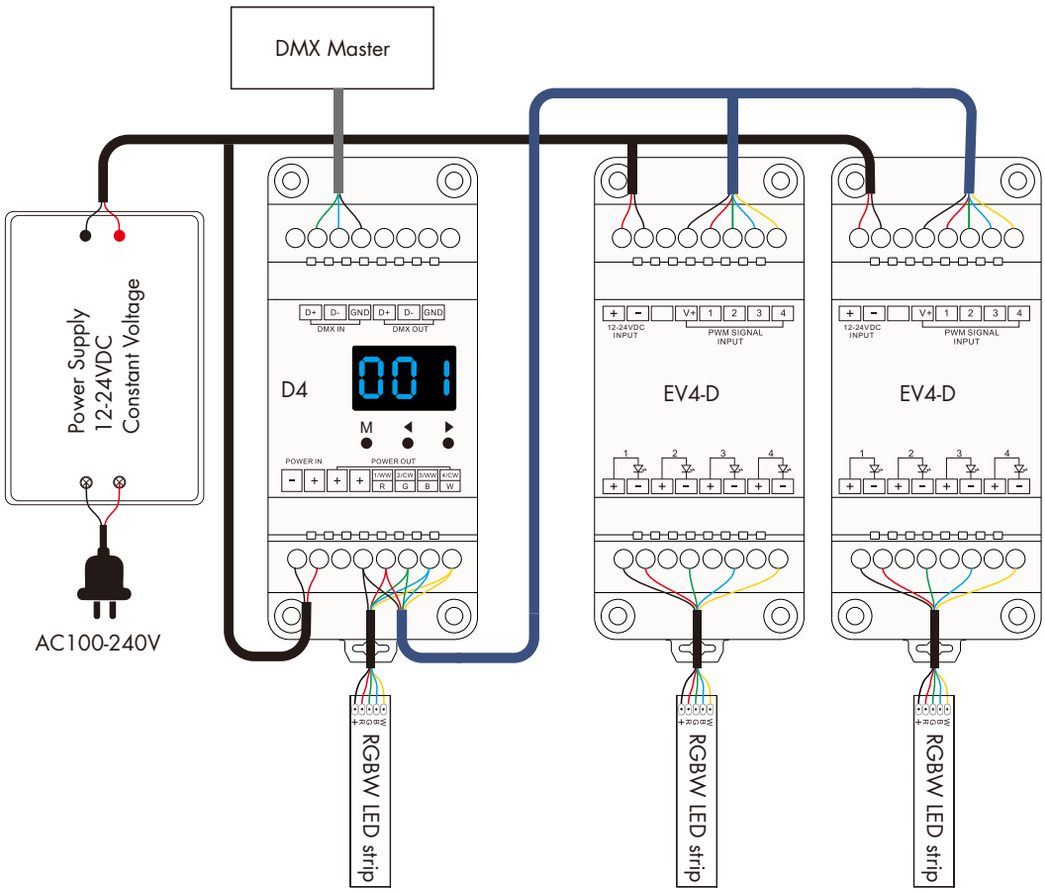

Note:
If the input PWM frequency is ≥ 8000Hz, it is recommended to reduce the output current to below 70% to avoid overheating and affecting the service life of the product.

Malfunctions Analysis & Troubleshooting

Malfunctions	Causes	Troubleshooting
No light	1. No power. 2. Wrong connection or insecure.	1. Check the power. 2. Check the connection.
Wrong color	1. Wrong connection of R/G/B/W wires.	1. Reconnect R/G/B/W wires.
Uneven intensity between front and rear,with voltage drop	1. Output cable is too long. 2. Wire diameter is too small. 3. Overload beyond power supply capability. 4. Overload beyond controller capability.	1. Reduce cable or loop supply. 2. Change wider wire. 3. Replace higher power supply. 4. Add power repeater.

Safety & Warnings

1. The product shall be installed and serviced by a qualified person.
2. This product is non-waterproof. Please avoid the sun and rain.
3. Good heat dissipation will prolong the working life of the controller,Please ensure good ventilation.
4. Please check if the output voltage of any power supplies used comply with the working voltage of the product.
5. Ensure all wire connections and polarities are correct and secure before applying power to avoid any damages to the LED lights.
6. If a fault occurs please return the product to your supplier. Do not attempt to fix this product by yourself.

FCC Statement:
This device complies with Part 15 of the FCC Rules. operation is subject to the following two conditions:
(1)this device may not cause harmful interference, and
(2)this device must accept any interference received, including interference that may cause undesired operation.
IC Statement: This Class B digital apparatus complies with Canadian ICES-003.
(Cet appareil numérique de la Classe B conforme à la norme NMB-003 du Canada).